SUNSTAR传感与控制 http://www.sensor-ic.com/ TEL:0755-83376549 FAX:0755-83376182E-MAIL:szss20@163.com

KISTLER
measure. analyze. innovate.

Webbing Load Cell

Type M51111...

Uniaxial, Resistive

Type M51111... is designed to serve the measurement of the forces at the safety belt during a crash test, with a negligible impact on the belt's performance.

- Light-weight
- Low linearity error
- Easy replaceable cable solution
- Sensitivity typ. 130 µV/V/kN
- Measuring range 16 kN
- ID module inside load cell optionally available

Description

This sensor is comprised of a main body and two removeable bars. The main body is equipped with strain gages. Due to its superior design the safety belt force transmission into the main body is ideal. The acting force mechanically extends the main body. The built-in strain gages, implemented as a Wheatstone-type full bridge, will change their resistance, which is proportional to the acting force.

The sensor supports three essential targets for webbing load cells: An ultra-light weight, due to its Titanium design, good techical specifications and an easy handling, including a quick replaceable cable system. Due to its low weight it supports the demand to use more than one load cell simultaneously at the webbing.

The replaceable cable solution allows the user to quickly exchange a defect, sheared-off cable in just a few minutes. The cable is plugged-in with a miniature connector inside the housing and is protected against external loads.

The load cell is deliverable with two different cable outlet designs: Type M51111A... right-angled, Type M51111B... straight. Customized cable lengths, ID modules and connectors with specific pin assignments are optionally available for both variants.

Technical Data

Measuring range	kN	16
Sensitivity (typ.)	µV/V/kN	130
Bridge resistance	Ω	350
Limit	%	150
Supply voltage		
without ID module	VDC	5 ... 15
with ID module	VDC	9 ... 12
Current consumption (typ.)		
without ID module	mA	30
with ID module	mA	40
Insulation resistance [1]	MΩ	>90
Operating temperature range	°C	–20 ... 80
Storage temperature range	°C	–30 ... 90
Amplitude non-linearity [2] (typ./max.)	%	±2,0/±3,0
Hysteresis [2] (typ.)	%	<2,4
Zero measurand output (typ./max.)	mV	1/3
ID module	unit	1
Weight		
Type M51111A...	grams	79
Type M51111B...	grams	77
Sensor material		Titan
Webbing thickness	mm	1,3
Webbing width	mm	50
Dimensions	mm	65x35x16,5

All specifications are typical at 25 °C and rated at 10 V sensor supply voltage, unless otherwise specified.

[1] All wires to screen (GND), measured with 10 VDC
[2] Calibration with new standard belt (Berger 08022/2/0702)

M51111_000-759e-07.12

This information corresponds to the current state of knowledge. Kistler reserves the right to make technical changes. Liability for consequential damage resulting from the use of Kistler products is excluded.

©2009 ... 2012, Kistler Group, Eulachstrasse 22, 8408 Winterthur, Switzerland
Tel. +41 52 224 11 11, Fax +41 52 224 14 14, info@kistler.com, www.kistler.com
Kistler is a registered trademark of Kistler Holding AG.

SUNSTAR自动化 http://www.sensor-ic.com/ TEL: 0755-83376489 FAX:0755-83376182 E-MAIL: szss20@163.com

SUNSTAR传感与控制 http://www.sensor-ic.com/ TEL:0755-83376549 FAX:0755-83376182E-MAIL:szss20@163.com

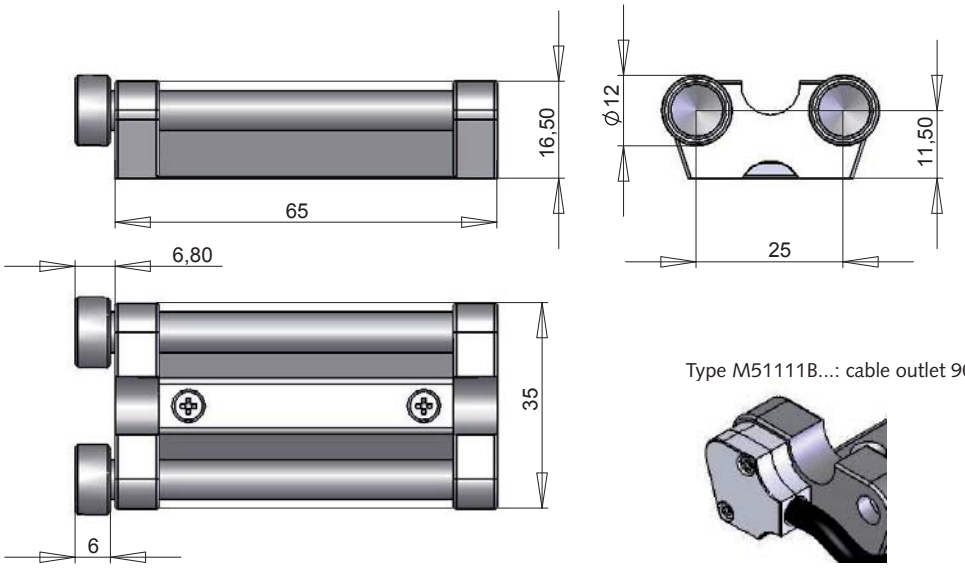

Type M51111B...: cable outlet 90°

Fig. 1: Dimensions in mm

Application

Type M51111... is designed to serve the measurement of the forces at the safety belt during a crash test, with a negligible impact on the belt's performance. The load cell is fixed with just a few turns at the webbing. To mount the device the two retaining bars are completely removeable from the body. After the mounting is done, the load cell system is ready to measure.

Fig. 3: Miniature connector inside load cell body

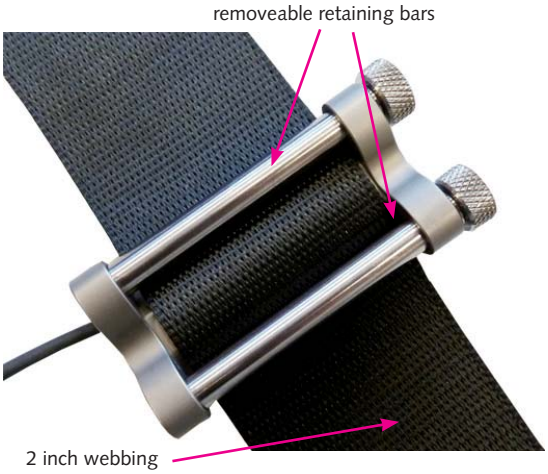

Fig. 2: Application sample (image similar to Type M51111B...)

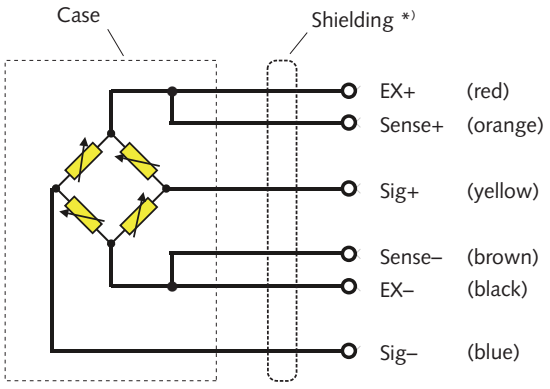

*) Shielding is connected to plug housing

Fig. 4: Schematic diagram

This information corresponds to the current state of knowledge. Kistler reserves the right to make technical changes. Liability for consequential damage resulting from the use of Kistler products is excluded.

©2009 ... 2012, Kistler Group, Eulachstrasse 22, 8408 Winterthur, Switzerland
Tel. +41 52 224 11 11, Fax +41 52 224 14 14, info@kistler.com, www.kistler.com
Kistler is a registered trademark of Kistler Holding AG.

SUNSTAR自动化 http://www.sensor-ic.com/ TEL: 0755-83376489 FAX:0755-83376182 E-MAIL: szss20@163.com

SUNSTAR传感与控制 http://www.sensor-ic.com/ TEL:0755-83376549 FAX:0755-83376182E-MAIL: szss20@163.com

KISTLER

measure. analyze. innovate.

Included Accessories	Art. No.
• 6 m replacement cable with mini connector and open end	on request
• 1 pair removeable retaining bars, material Titanium	on request

Optional Accessories	Art. No.
• Cable length up to 10 m	on request
• Customized connector	on request
• Add. label, customized	M015KABID
• Add. shunt	on request
• ID module	on request

Ordering Key

Type M51111 ☐☐☐☐☐

Design

Right-angled cable outlet	**ANM**
Straight cable outlet	**BNM**

Cable Length before Electronics

<10 cm (digit x 1 cm)	**C#**
10 cm ... 9,9 m (digit x 10 cm)	**##**
10 m ... 90 m (digit x 10 m)	**D#**

Electronics

No electronics	**A**
UPS	**B**
Dallas	**C**
Dallas with E^2	**D**

Cable Length after Electronics

<10 cm (digit x 1 cm)	**C#**
10 cm ... 9,9 m (digit x 10 cm)	**##**
10 m ... 90 m (digit x 10 m)	**D#**

Connector

Conn. type, as per FB-1004	**#-**
Conn. assignment, as per FB-1004	**-#**

M51111_000-759e-07.12

This information corresponds to the current state of knowledge. Kistler reserves the right to make technical changes. Liability for consequential damage resulting from the use of Kistler products is excluded.

©2009 ... 2012, Kistler Group, Eulachstrasse 22, 8408 Winterthur, Switzerland
Tel. +41 52 224 11 11, Fax +41 52 224 14 14, info@kistler.com, www.kistler.com
Kistler is a registered trademark of Kistler Holding AG.

SUNSTAR自动化 http://www.sensor-ic.com/ TEL: 0755-83376489 FAX:0755-83376182 E-MAIL: szss20@163.com